AXOR

hansgrohe

AXOR Urquiola
Single lever basin mixer 280 for wash bowls with waste set
Surfaces: **Chrome** Article Number: **11035000**

Description

product features

- consists of: single lever basin mixer, waste set
- ComfortZone 280
- projection 198 mm
- normal spray
- flow rate at 3 bar: 5 l/min
- ceramic cartridge
- temperature limitation adjustable
- suitable for continuous flow water heaters
- non-closing waste set
- connection type: G ⅜ connections
- connection dimension: DN15
- handle position on the side: top-side at the spout (generally suitable for wash bowls)

Technology

Product image

Scale drawing

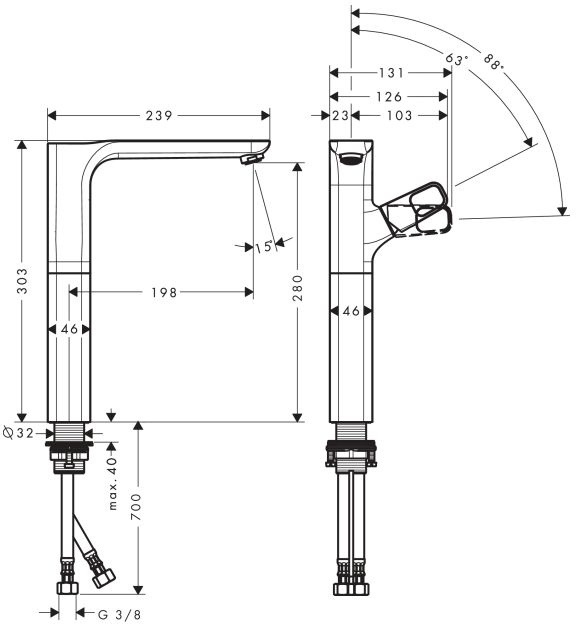
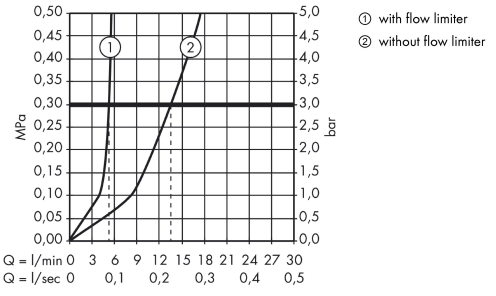
Flowchart